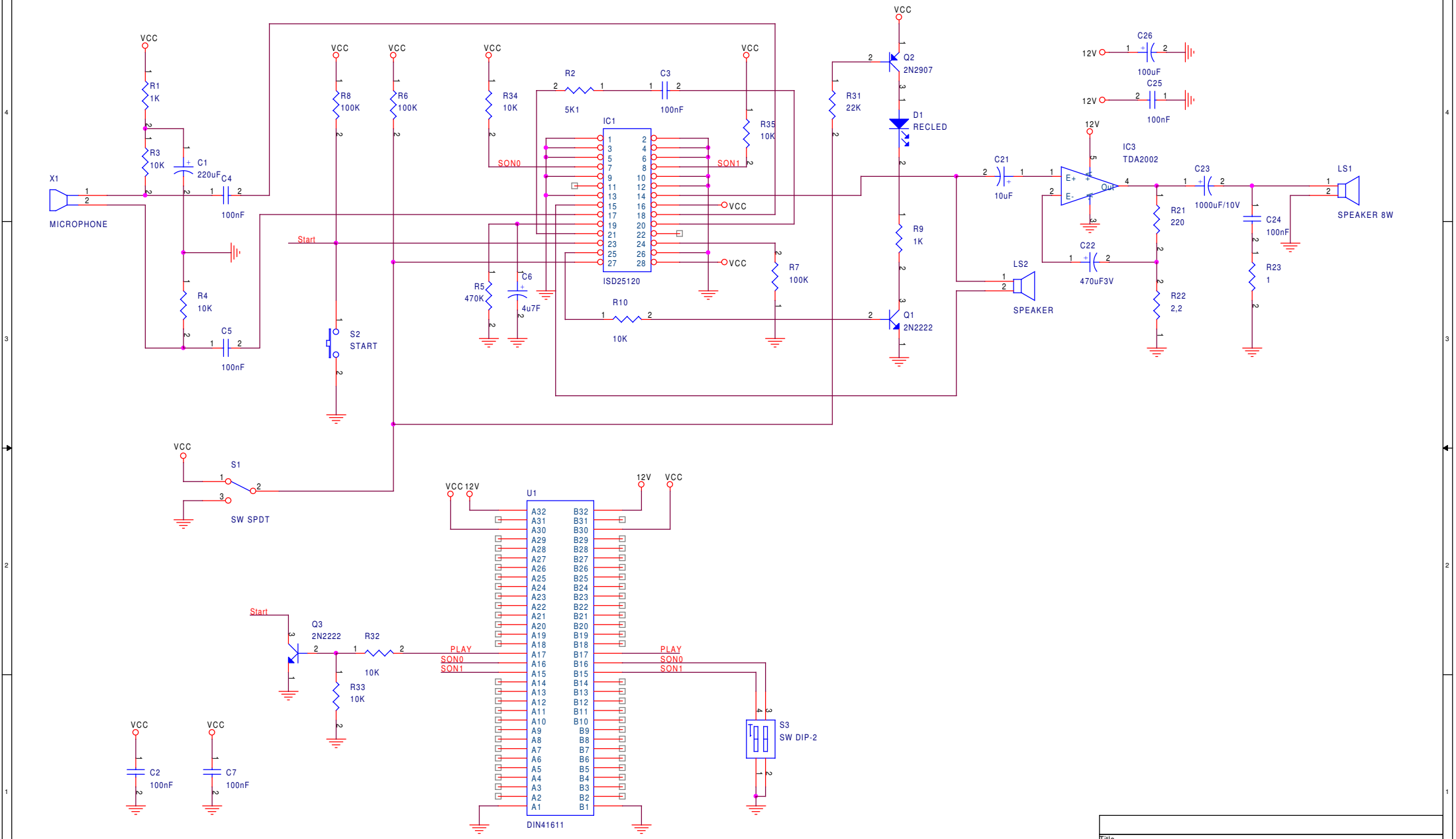

Title	Centrale de navigation	
Size B	Document Number Systeme de sonorisation	Rev 1.0
Date: Wednesday, May 09, 2007	Sheet 1 of 1	